NPP-4840-N-SpillPal

48x40 (Standard)
Plastic Industrial Pallet

Technical Data

Dimensions	48x40x6 inches
Weight	28 lbs
Load Capacities	
Static	8000 lbs
Dynamic	3000 lbs
Racking	1500 lbs
Entry	4-way
Truckload Qty	750
Stack TL	25

TL (truckload) quantities are approximate and may vary by transport equipment or other factors.

Handling Data

Nestable
Yes

Reusability
Multi-Trip

ISPM-15 Exempt
Yes

Stackable
Yes

Destination
Captive

Food Grade
Yes, non-FDA

Rackable
Yes

Airfreight
Yes

Pharmaceutical
Yes

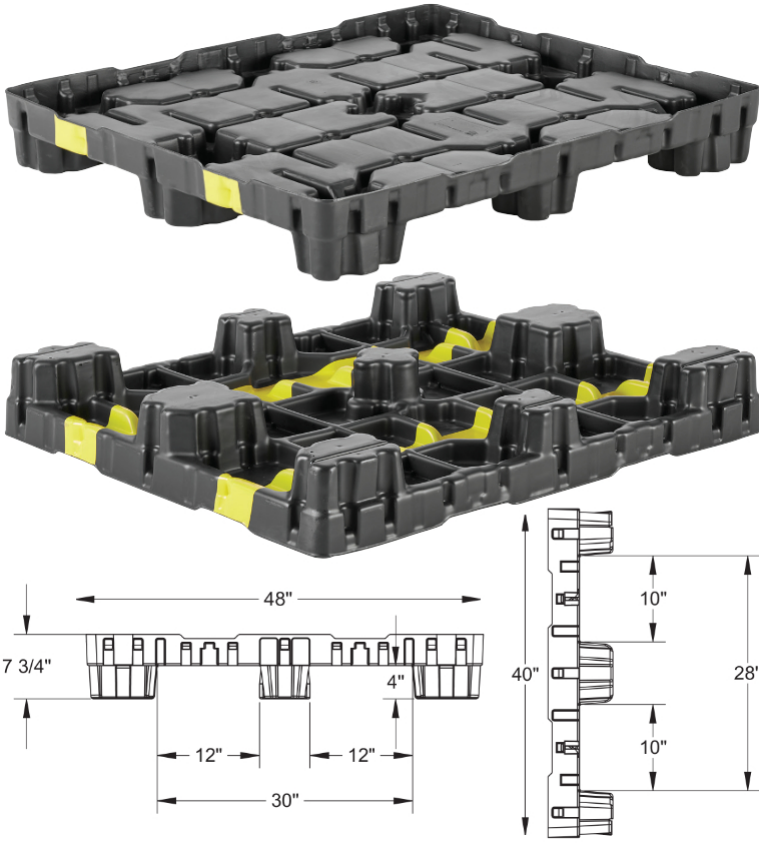

Materials and Colors

Condition
New

Material	Color
HDPE (Recycled)	Black
HDPE (Virgin*)	Gray/Custom*

*Custom colors and markings available in virgin material. (Minimum quantities required.)

Deck Specs

Top Deck
Closed

Bottom Deck
9 Feet - Nesting

Available Options:
Molded-in no-rust aluminum bars for strength and rigidity
Holes in feet to allow for either flow-thru or containment of liquids

Features

- Top deck channels prevent liquids from pooling
- Thick 1/4" nominal walls provide highest impact strength available
- Virtually eliminates combo "tipping" during shipment with other plastic or wood pallets
- Boxy 9 leg design allows racking in certain applications
- Nesting saves storage & shipping costs
- Allows for safe double stacking
- Easy-to-clean hygienic design
- Suitable for packaged food items (*not approved for direct food contact*)
- Impervious to acids, fats, solvents and odors
- Resists water absorption & bacteria growth
- Inert to infestation, mold and mildew
- Consistently dimensionally accurate
- Exempt from ISPM 15 shipping regulations

Nelson™
The Nelson Company
(443) 649-5294
plastic@NelsonCompany.com
www.NelsonCompany.com
www.NelsonTechCenter.com

Spec Sheet Generated On: 4/23/2024
Specs subject to change without notice. Provided for informational purposes only. Technical data are guideline values and may vary based on intended use, features, raw materials and environment. Nothing shall be construed as warranties or guarantees, express or implied, regarding products or their use, application, performance or otherwise.

NPP-4840-N-SpillPal

48x40 (Standard)
Plastic Industrial Pallet

Technical Drawings

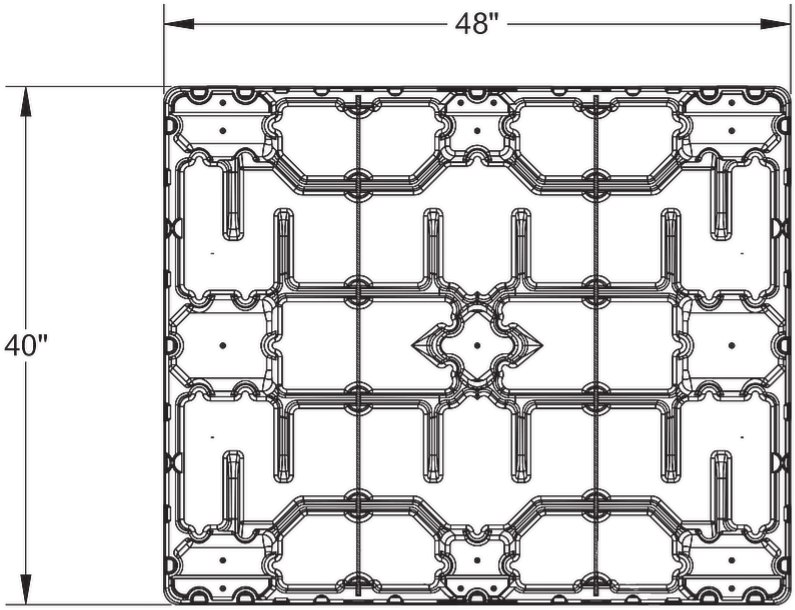

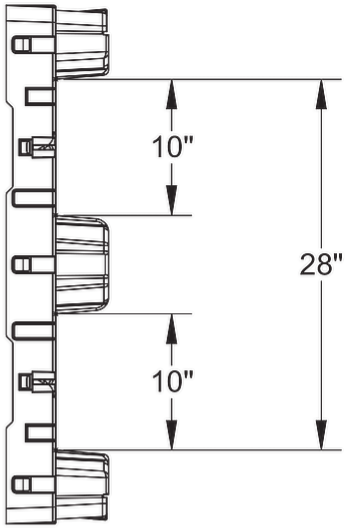

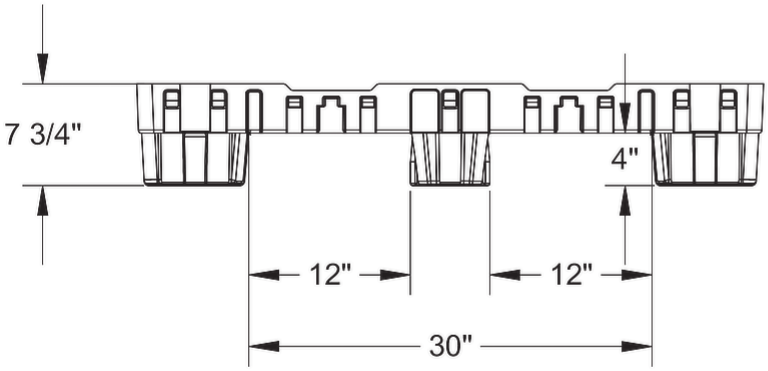

The Nelson Company
(443) 649-5294
plastic@NelsonCompany.com
www.NelsonCompany.com
www.NelsonTechCenter.com

Tech Sheet Generated On: 4/23/2024
Specs subject to change without notice. Provided for informational purposes only. Technical data are guideline values and may vary based on intended use, features, raw materials and environment. Nothing shall be construed as warranties or guarantees, express or implied, regarding products or their use, application, performance or otherwise.