UP-4842-N-TDC4

48x42 (Standard)
Plastic Industrial Pallet

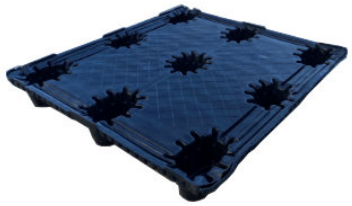

Technical Data

Dimensions	48x42x6.5 inches
Weight	22 lbs
Load Capacities	
Static	6500 lbs
Dynamic	2500 lbs
Racking	--
Entry	4-way
Truckload Qty	1080
Stack TL	36

Load capacities for used pallets may be unavailable or may have changed since issued. Unit load Sample Tests (ST) are recommended to confirm successful use with specific applications and equipment. TL (truckload) quantities are approximate and may vary by transport equipment or other factors.

Handling Data

Nestable Yes	**Reusability** One-Way & Multi-Trip	**ISPM-15 Exempt** Yes
Stackable No	**Destination** Export & Captive	**Food Grade** Yes, non-FDA
Rackable No	**Airfreight** Yes	**Pharmaceutical** Yes

Materials and Colors

Condition
Used

Material
HDPE (Recycled)

Color
Varies

(High-Density Polyethylene)

Colors and manufacturers vary and orders may be mixed. To avoid return freight charges ask your Sales Rep about special requests. All used pallets have been inspected and cleaned. Pallets may have limited cosmetic damage, but all are structurally sound.

Deck Specs

Top Deck
Closed

Bottom Deck
9 Feet - Nesting

Features

- Nesting saves storage & shipping costs
- Low-cost Plastic Pallet
- Easy-to-clean hygienic design
- Suitable for packaged food items (*not approved for direct food contact*)
- Impervious to acids, fats, solvents and odors
- Resists water absorption & bacteria growth
- Inert to infestation, mold and mildew
- Consistently dimensionally accurate
- Exempt from ISPM 15 shipping regulations

Nelson™
The Nelson Company
(443) 649-5294
plastic@NelsonCompany.com
www.NelsonCompany.com
www.NelsonTechCenter.com

Spec Sheet Generated On: 4/26/2024
Specs subject to change without notice. Provided for informational purposes only. Technical data are guideline values and may vary based on intended use, features, raw materials and environment. Nothing shall be construed as warranties or guarantees, express or implied, regarding products or their use, application, performance or otherwise.

UP-4842-N-TDC4

48x42 (Standard)
Plastic Industrial Pallet

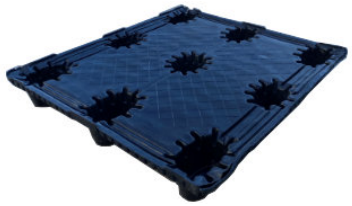

Technical Drawings

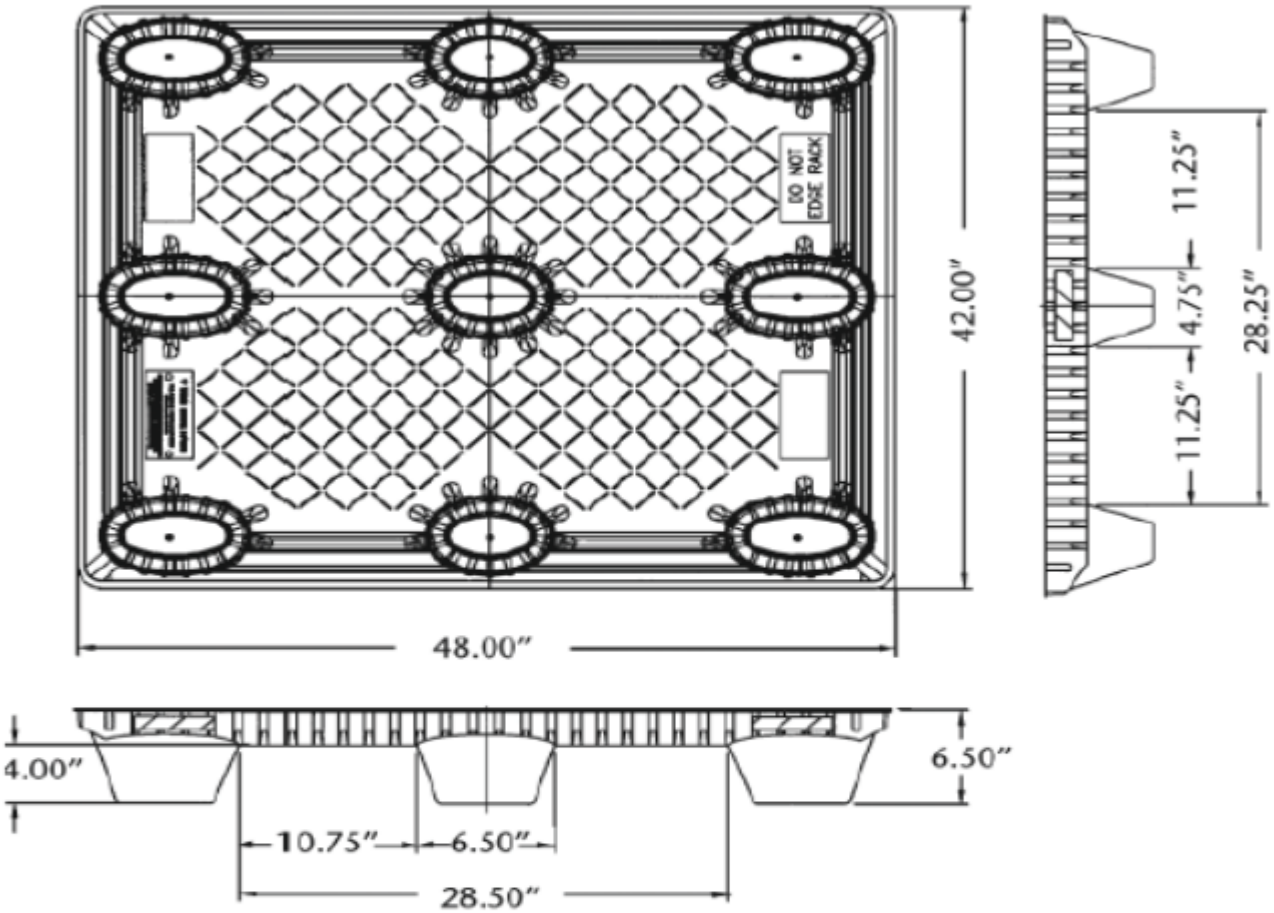

The Nelson Company
(443) 649-5294
plastic@NelsonCompany.com
www.NelsonCompany.com
www.NelsonTechCenter.com

Tech Sheet Generated On: 4/26/2024
Specs subject to change without notice. Provided for informational purposes only. Technical data are guideline values and may vary based on intended use, features, raw materials and environment. Nothing shall be construed as warranties or guarantees, express or implied, regarding products or their use, application, performance or otherwise.